OptiSplice® LID Fusion Splicer

An Evolant® Solutions Product

Application

- Long-haul, CATV, telco and LAN applications
- Accurately splices current, legacy, dissimilar and specialty fiber types
- Splices 900 µm pigtails utilizing three-dimensional core alignment technology – the core detection system (CDS) mode

Description

The OptiSplice® LID Fusion Splicer is the latest iteration of Corning Cable Systems' best-selling unit, the X77. The OptiSplice LID offers the active core alignment accuracy of Corning Cable Systems LID-SYSTEM™ Unit, along with the speed and versatility of a passive core-alignment technology known as the core detection system (CDS).

With the increasing number of applications for splicing dissimilar and specialty fibers, the LID-SYSTEM Unit is a necessity for low-loss splices. The OptiSplice LID is the perfect combination of precise operation and ease of use in one cost-effective machine.

Features / Benefits

- Two-in-one alignment unit offering direct active alignment with LID-SYSTEM Unit Technology and fast 3-axis camera-based passive core-alignment with core detection system (CDS)
- Utilizes automatic fusion time to optimize each splice (LID-SYSTEM Unit)
- Real splice loss measurement with LID-system or splice loss estimation with CDS
- Fastest core-alignment fusion splicer on the market with a total splice cycle time of approximately 35 seconds (15 seconds CDS mode splice time + 20 seconds heat-shrink oven = 35 seconds total cycle time)
- Auto-Start feature begins the splice process when the fiber flaps close
- Integrated Global Positioning System (GPS) for automatically adjusting for altitude changes, as well as storing splice location coordinates

OptiSplice LID Fusion Splicer | Photo LAN882

OptiSplice LID Fusion Splicer Carry-On Case | Photo NS81

- Includes an external AC power adapter and a high-capacity Li-Ion battery with external charger
- Rugged, watertight "carry-on" style carrying case
- Maintenance-free precise and durable (P&D) electrodes
- Ultra-fast heat-shrink oven (20 seconds heating time on 60 mm heat-shrinks)
- USB work lamp (optional)
- Capable of building attenuators by using programmable splice loss program (up to 10 dB in 0.1 dB increments)
- RDUP listed (formerly RUS)

CORNING
Evolant®
Solutions

Product Specifications

OptiSplice® LID Fusion Splicer

An Evolant® Solutions Product

LID-SYSTEM™ Unit Technology

The accuracy of the LID-SYSTEM Unit and its power through splice loss measurement method eliminates the time consuming task of evaluating splices with an OTDR. The single-mode LID-SYSTEM Unit first optimizes core alignment in each of the X, Y and Z axes. When the fusion process begins, the OptiSplice® LID Fusion Splicer's unique auto fusion time control monitors the power level through the splice and completes the fusing process when splice loss is at a minimum – ensuring the best splice possible. Finally, the LID-SYSTEM Unit measures splice loss by comparing power levels before and after the fusion process.

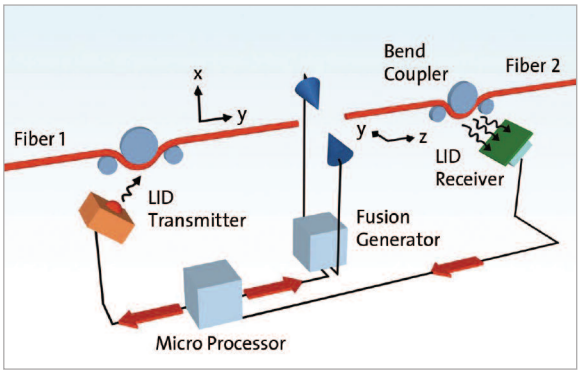

LID-SYSTEM Unit Technology | Drawing ZA-2736

Core Detection System (CDS)

The OptiSplice LID Fusion Splicer is equipped with a secondary method for core alignment (CDS) based on cameras. This technology, although not as accurate as the LID-SYSTEM, allows for fast core alignment (15 seconds) even on 900 µm single-mode fibers. The OptiSplice LID Fusion Splicer is also capable of automatically choosing the best alignment method for the application at hand.

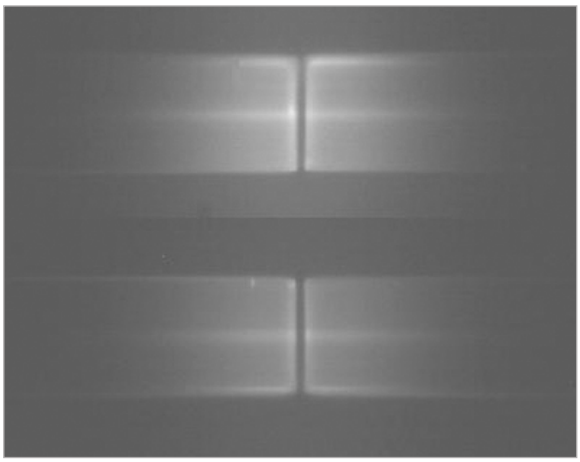

Core Detection System Technology (CDS) | Photo NS135

Precise and Durable Electrodes (P&D)

Precise and durable (P&D) electrodes for the OptiSplice LID Fusion Splicer are absolutely maintenance-free, worry-free, and can reduce the average splice loss up to 50 percent. Permanently attached arc-stabilizers guarantee both high-precision and long-life durability. An electrode cleaning arc, which is applied by the fusion splicer automatically, is sufficient to ensure continued low-loss splicing for approximately 7,000 arcs.

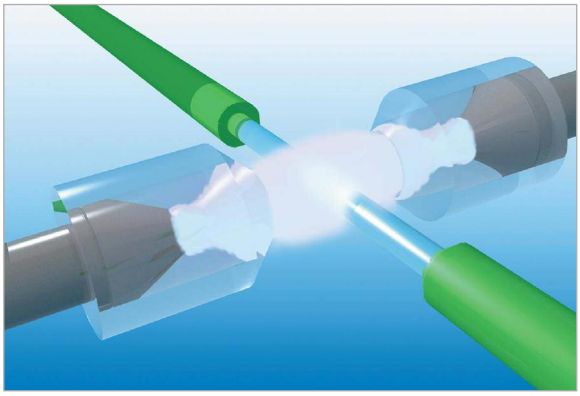

Precise and Durable Electrodes (P&D) | Drawing ZA-2737

OptiSplice® LID Fusion Splicer

An Evolant® Solutions Product

Specifications

Parameter	Specification
Principle Operation	Direct Core Alignment LID-SYSTEM™ Unit, 3-axis alignment, 1300 nm LED
Secondary Operation	Passive 3-axis core alignment by core detection system technology (CDS)
Fiber Coatings	Single and multimode optical fibers with cladding diameter of 125 µm and coating diameters of 250 µm to 900 µm
Fiber Types	Standard single-mode, specialty single-mode (ClearCurve™, NZDS, DS, LS, Er), multimode (50 µm and 62.5 µm)
Typical Splice Loss*	Standard single-mode < 0.02 dB (similar fibers), < 0.05 dB (dissimilar fibers) NZDS < 0.03 dB (similar fibers), < 0.06 dB (dissimilar fibers) Multimode < 0.01 dB
Estimator Accuracy	Typically ± 0.02 dB for standard single-mode splices when using the LID-SYSTEM Unit Technology mode, typically ±0.03 dB when using CDS mode
Monitor	Color VGA LCD, 140x magnification, 6.4-in diagonal screen; external jack with PAL output
Splice Protection	Heat-shrink, Splice Pak™ Splice Protector or Crimp & Go® Crimping Device
Programs	35 factory-optimized programs for different fiber types, 2 attenuation splice programs for building attenuators up to 10 dB in 0.1 dB increments, up to 200 user-defined programs
Interface Ports	Video signal PAL (TV output port), RS232/V.24, GPS antenna port, external LID transmitter (pigtail adapter) 3.5 mm socket
Splice Loss Storage	Splice data memory for 6,000 data sets, including GPS data
Heat-Shrink Oven	20 seconds on 60 mm heat-shrinks (fastest in the industry)
Precise and Durable Electrodes	Maintenance-free to the operator (lasts approximately 7,000 splices)
Operating Temperature	-15 to +50°C
Storage Temperature	-40 to +80°C
Humidity	95%, non-condensing
Power	External 12 VDC/80 W desktop power supply, input voltage 100 V AC to 240 V AC, 47 Hz to 63 Hz Internal 7.2 Ah lithium ion battery, exchangeable without tools, for approximately 7 hours continuous working time (if fully charged) with typically 200 splice operations without heat-shrink oven and typically 130 splice operations with fast heat-shrink oven working
Dimensions (L x W x H)	240 x 200 x 110 mm (9.4 x 7.8 x 4.3 in)
Weight	2.0 kg (4.4 lb) without battery, 2.5 kg (5.5 lb) with battery

**Under common field conditions*

OptiSplice® LID Fusion Splicer

An Evolant® Solutions Product

Ordering Information

Part Number	Description
OSLID-0SM-T-H	OptiSplice® LID Fusion Splicer with FBC-006 cleaver, carrying case with wheels, fast heat-shrink oven, splice tray holder, AC power supply with US power cord, Li-Ion battery with external charger, 1-year limited warranty, operator's manual, maintenance tool kit
OSLID-XSM-T-H	OptiSplice LID Fusion Splicer with carrying case with wheels, fast heat-shrink oven, splice tray holder, AC power supply with US power cord, Li-Ion battery with external charger, 1-year limited warranty, operator's manual, maintenance tool kit
OSLID-0SM-T-C	OptiSplice LID Fusion Splicer with FBC-006 cleaver, carrying case with wheels, Crimp & Go® Splice Protection Crimping Device, splice tray holder, AC power supply with US power cord, Li-Ion battery with external charger, 1-year limited warranty, operator's manual, maintenance tool kit
OSLID-XSM-T-C	OptiSplice LID Fusion Splicer with carrying case with wheels, Crimp & Go Splice Protection Crimping Device, splice tray holder, AC power supply with US power cord, high-capacity Li-Ion battery with external charger, 1-year limited warranty, operator's manual, maintenance tool kit
OSLID-0SM-T-P	OptiSplice LID Fusion Splicer with FBC-006 cleaver, carrying case with wheels, Splice Pak™ Splice Protector crimp device with fiber guides, splice tray holder, AC power supply with US power cord, Li-Ion battery with external charger, 1-year limited warranty, operator's manual, maintenance tool kit
OSLID-XSM-T-P	OptiSplice LID Fusion Splicer with carrying case with wheels, Splice Pak Splice Protector crimp device with fiber guides, splice tray holder, AC power supply with US power cord, Li-Ion battery with external charger, 1-year limited warranty, operator's manual, maintenance tool kit

Accessories

Part Number	Description
FBC-006	High-Performance Cleaver, one-step operation, diamond blade (typically < 0.7º)
FSA-022	Spare Precise and Durable (P&D) Electrodes
2820013-01	OptiSplice LID / M90e / M90i / X77i USB worklight
2806031-01	Heat-Shrink Splice Protection Parts (package of 50, 60 mm long)
FSA-012	Crimp & Go Splice Protection Crimping Device Parts (150/pack)
OSLID-SPLICEPAK	Splice Pak Splice Protector Crimp Adapter with fiber guides
A0276859	Splice Pak Splice Protector, yellow, 250/250 µm (25/pack)
A0295149	Splice Pak Splice Protector, blue, 250/900 µm (25/pack)
A0295150	Splice Pak Splice Protector, green, 900/900 µm (25/pack)
M67-003	Fusion Splicing Tool Kit
TKT-SPLICE	Basic Fusion Splicing Tool Kit
OFT-000	Optical Fiber Access Tool for midspan access
TKT-FIBERTECH-PRO	Advanced Fiber Optic Cable Prep and Splicing Tool Kit

CORNING

Evolant®
Solutions

Corning Cable Systems LLC • PO Box 489 • Hickory, NC 28603-0489 USA
800-743-2675 • FAX: 828-901-5973 • International: +1-828-901-5000 • www.corning.com/cablesystems

Corning Cable Systems reserves the right to improve, enhance and modify the features and specifications of Corning Cable Systems products without prior notification. Crimp & Go, Evolant and OptiSplice are registered trademarks of Corning Cable Systems Brands, Inc. LID-SYSTEM and Splice Pak are trademarks of Corning Cable Systems Brands, Inc. ClearCurve is a trademark of Corning Incorporated. All other trademarks are the properties of their respective owners. Corning Cable Systems is ISO 9001 certified. © 2007, 2008 Corning Cable Systems. All rights reserved.
Published in the USA. EVO-773-EN / June 2008