OptiSplice™ Premier iLID Fusion Splicer

A LANscape® Pretium™ Solutions Product

Corning
Cable Systems

Applications

- For the lowest field splice loss commercially available
- Telco, CATV, long-haul, enterprise, FTTx networks
- World's first PC-based fusion splicer

Description

The future of fusion splicing is available today with the Corning Cable Systems OptiSplice™ Premier iLID Fusion Splicer. The latest addition to the OptiSplice Fusion Splicer product family, the iLID is the ideal machine for networks where low-loss performance and high-end accuracy are imperative. The LID-SYSTEM® Unit (Local Injection and Detection System) monitors light injected into the core of the fibers for precise core-alignment, real-time splice optimization during the fusion process and extremely accurate splice loss evaluation.

The iLID Fusion Splicer includes an industry first, a completely integrated, full-featured PC. Having a built-in PC allows unheard of features and enhanced splicing performance.

Features / Benefits

- Utilizes proven LID system technology for ultra-low-loss fusion splicing. The LID-SYSTEM Unit provides active core alignment, auto-fusion time control and splice loss measurement
- Factory programs and user-defined programs for all common fiber types (SM, MM, NZDS, etc.)
- Graphical user interface for easy menu navigation
- Remote service capabilities via the Internet
  - The Fusion Splicer Service Center can view splices and control the splicer remotely
  - Allows remote calibration and diagnostics
  - Greatly reduces maintenance/downtime costs
  - Data analysis
  - Software upgrades
- On-board, interactive training videos
  - Reduces training time and costs
  - Includes operational and maintenance sections

(continued)

OptiSplice Premier iLID Fusion Splicer | Photo SEH146

PC Functions via Touch Screen | Photo SEH147

Graphical User Interface | Photo SEH150

Features / Benefits (continued)

- Built-in full-function PC
  - Windows® XP Professional edition
  - Compatible with most off-the-shelf software
  - 6.4-in color touch screen
  - Compatible with most USB accessories
- Integrated Global Positioning System (GPS)
- Ultra-fast, energy efficient heat-shrink oven (only 10 seconds) *coming soon*
- Maintenance-free Precise & Durable (P&D) Electrodes
- Automatic, fusion splicing operation with auto-start feature

LID-SYSTEM® Unit Technology

The accuracy of the LID-SYSTEM Unit and its power-through splice loss measurement method eliminates the time-consuming task of evaluating splices with an OTDR. The single-mode LID-SYSTEM Unit first optimizes core alignment in each of the X, Y and Z axes. When the fusion process begins, the iLID Fusion Splicer's unique Auto Fusion Time Control monitors the power level through the splice and completes the fusing process when splice loss is at a minimum – ensuring the best splice possible. Finally, the LID-SYSTEM Unit measures splice loss by comparing power levels before and after the fusion process.

Precise & Durable (P&D) Electrodes

P&D Electrodes for the iLID Fusion Splicer are maintenance-free, worry-free and can reduce the average splice loss up to 50 percent when compared to standard electrodes. Permanently attached arc-stabilizers guarantee both high precision and long-life durability. An electrode cleaning arc, which is applied by the fusion splicer automatically, is sufficient to ensure continued low-loss splicing for approximately 7000 arcs.

Core Detection System (CDS™)

The iLID is now equipped with a secondary method for core alignment based on cameras. Core Detection System (CDS), although not as accurate as the LID SYSTEM, allows for fast core-alignment (15s) even on 900 µm SM fibers. The iLID is also capable of automatically choosing the best alignment method for the application at hand.

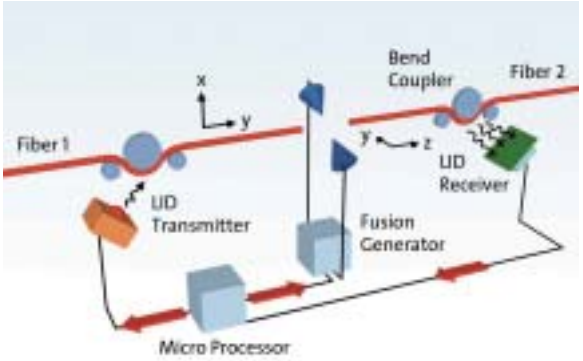

Principle of the LID-System Unit | Photo ZA-2736

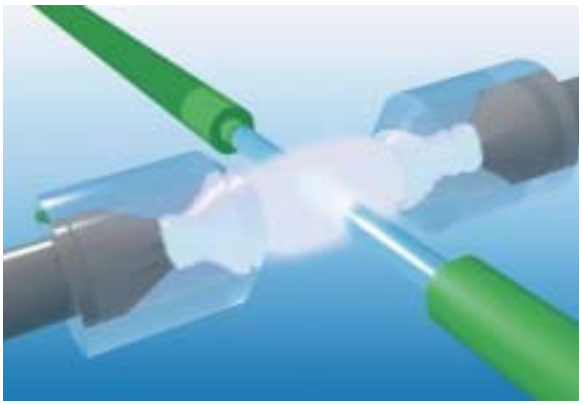

P&D Electrodes with Arc Stabilizing Tubes | Photo ZA-2737

OptiSplice™ Premier iLID Fusion Splicer

A LANscape® Pretium™ Solutions Product

Corning
Cable Systems

Integrated PC

Corning Cable Systems is proud to continue to lead the industry with innovative fusion splicing technology and award-winning service. The OptiSplice™ Premier iLID Fusion Splicer is the first fusion splicer to include a built-in, full-function PC. The integrated PC not only increases splicer performance, but also serves as an information portal.

The combination of the iLID Fusion Splicer with commercially available PC software/PC accessories is extremely beneficial in the following ways:

- Send documentation to and from the job site via e-mail
- Use the integrated GPS system to store location coordinates
- Attach the splicer to a cell phone via USB 2.0 Port to access the Internet or to transfer data
- Connect to the Corning Cable Systems Splicer Service Center from a remote location for software upgrades or assistance
- Transfer data to or from a USB memory device or CD-RW drive
- Connect the iLID Fusion Splicer directly to a flat panel monitor or a data projector for group training sessions

The PC applications can also be blocked from unauthorized use and can be restored to the original configuration.

Specifications

Parameter	Specification
Principle Operation	Direct Core Alignment LID-SYSTEM® Unit, three-axis alignment
Fiber Coatings	250 µm to 900 µm
Fiber Types	Single-mode, specialty single-mode (NZDS, DS, LS, Er), multimode (50 µm and 62.5 µm)
Number of Programs	28 factory-optimized programs, user-defined programs only limited by hard drive space; includes fiber types listed above, dissimilar fiber and attenuator programs
Typical Splice Loss	Single-mode < 0.02 dB for identical single-mode fiber, < 0.05 dB field loss* Multimode < 0.01 dB NZDS < 0.03 dB for identical fiber, < 0.06 dB field loss*
Estimator Accuracy	Typically ± 0.03 dB for the standard single splices when using the precise mode
Monitor	Color VGA LCD, 139x, 6.4-in diagonal touch screen; external jack for NTSC/PAL output
Splice Protection	Heat-Shrink, Splice Pak™ Splice Protector or Crimp & Go® Splice Protection
Integrated PC Specs	1 GHz processor, 256 MB RAM, 20 GB hard drive, built-in speaker, Windows® XP Professional Edition, 10/100 M/b Ethernet speed
PC Ports	Ethernet (CAT 5), USB 1.1, USB 2.0, headphone jack, microphone jack, VGA output
Splice Loss Storage	Limited only by hard drive space (>100,000)
Heat-Shrink Oven (coming soon)	10 seconds on 60 mm heat-shrinks (fastest in the industry); energy efficient design increases battery life of the fusion splicer. The current oven has a 60 second process.
Precise & Durable Electrodes	Maintenance-free to the operator (lasts approximately 7000 splices)
Power	AC 100-240 VAC, automatic voltage range selection; 47 to 63 Hz; 100 W maximum DC 3X, 2.3 Ah, 12 VDC rechargeable batteries provides approximately 70 splices with heat-shrink oven or approximately two hours, recharge time approximately eight hours (see three hour charging option; Accessories section)
Operating Temperature	-15° to +50°C, at 93% relative humidity
Storage Temperature	-40° to + 80°C
Dimensions (H x W x D)	216 x 185 x 40 mm (8.5 x 7.3 x 5.5 in)
Weight	3.1 kg (7 lb) without batteries 5.1 kg (11.25 lb) with batteries

** When used with non-identical fibers under common field conditions.*

CORNING
Discovering Beyond Imagination

LANscape® PRETIUM
THE PREMIER SOLUTION

OptiSplice™ Premier iLID Fusion Splicer

A LANscape® Pretium™ Solutions Product

Corning
Cable Systems

Ordering Information

Part Number	Description
iLID-0SM-T-H (Most Popular Configuration)	OptiSplice™ Premier iLID Fusion Splicer with FBC-006 cleaver, heavy-duty carrying case with handle and wheels, heat-shrink oven, detachable splice tray holder, USB work lamp, AC power supply with US power cord, 12 V rechargeable batteries (quantity three), one-year limited warranty, one-year remote service plan, operators manual, maintenance tool kit
iLID-XSM-T-H	OptiSplice Premier iLID Fusion Splicer, heavy-duty carrying case with handle and wheels, heat-shrink oven, detachable splice tray holder, USB work lamp, AC power supply with US power cord, 12 V rechargeable batteries (quantity three), one-year limited warranty, one-year remote service plan, operators manual, maintenance tool kit
iLID-0SM-T-C	OptiSplice Premier iLID Fusion Splicer with FBC-006 cleaver, heavy-duty carrying case with handle and wheels, Crimp & Go® Splice Protection Crimping Device, detachable splice tray holder, USB work lamp, AC power supply with US power cord, 12 V rechargeable batteries (quantity three), one-year limited warranty, one-year remote service plan, operators manual, maintenance tool kit
iLID-0SM-T-P	OptiSplice Premier iLID Fusion Splicer with FBC-006 cleaver, heavy-duty carrying case with handle and wheels, Splice Pak™ Splice Protector crimp adapter with transfer arms, detachable splice tray holder, USB work lamp, AC power supply with US power cord, 12 V rechargeable batteries (quantity three), one-year limited warranty, one-year remote service plan, operators manual, maintenance tool kit

Accessories

Part Number	Description
FBC-006	High-Performance Cleaver, one-step operation, diamond blade (typically < 0.5°)
iLID-Fast-Oven ***coming soon***	Ultra-Fast Heat-Shrink Oven for iLID Fusion Splicer (10 second process on 60 mm parts)
FSA-022	Spare Precise & Durable (P&D) Electrodes
iLIDRemoteService	One-Year Extended Service Plan – includes remote diagnostics/calibration, splicer software upgrades and general support. Note: Does not extend the warranty, nor include in-house repair service or repair parts. Does not include Internet access – customers must provide their own Internet access or standard dial-up phone connection (long distance charges may apply)
iLID-EXT-Warranty	One-Year Extended Warranty (must be purchased at the same time as splicer)
iLID-PC-KIT	USB Roll-Up Keyboard, mouse, external CD-RW drive and 128 Mb USB Memory Drive
2806031-01	Heat-Shrink Splice Protection Parts (package of 50, 60 mm long)
X75-010	Crimp & Go Splice Protection Crimping Device with mounting bracket
FSA-012	Crimp & Go Splice Protection Crimping Device parts (150/pack)
X7-TRANSFER	Splice Pak Splice Protector Crimp Adapter with transfer arms
A0276859	Splice Pak Splice Protector, yellow, 250/250 µm (25/pack)
A0295149	Splice Pak Splice Protector, blue, 250/900 µm (25/pack)
A0295150	Splice Pak Splice Protector, green, 900/900 µm (25/pack)
M67-003	Fusion Splicing Tool Kit
TKT-SPLICE	Basic Fusion Splicing Tool Kit
OFT-000	Optical Fiber Access Tool for mid-span access
A0398057	Spare Camcorder-style Battery
iLID-STYLUS	Replacement Stylus for use with the touch screen

** Third Party Software – Customer assumes all risks associated with installing and operating third party software on the iLID Fusion Splicer. Corning Cable Systems is not responsible for, and does not warranty any third party software, and will not support or service such software, nor will Corning assist in troubleshooting damage to, or problems with, the iLID Fusion Splicer caused by third party software. It is possible that third party software may interfere with the splicer operation. Corning is not responsible for software or data that is lost in the repair of splicers, nor will Corning be liable for any damages caused by the installation or use of third party software on the splicer. The customer is responsible for installing and updating anti-virus software.*

Corning Cable Systems LLC • PO Box 489 • Hickory, NC 28603-0489 USA
1-800-743-2675 • FAX: +1-828-901-5973 • International: +1-828-901-5000 • http://www.corning.com/cablesystems

Corning Cable Systems reserves the right to improve, enhance and modify the features and specifications of Corning Cable Systems products without prior notification. Crimp & Go, LANscape and LID-SYSTEM are registered trademarks of Corning Cable Systems Brands, Inc. OptiSplice, Pretium and Splice Pak are trademarks of Corning Cable Systems Brands, Inc. Discovering Beyond Imagination is a trademark of Corning Incorporated. Windows is a registered trademark of Microsoft Corporation, USA. All other trademarks are the properties of their respective owners. Corning Cable Systems is ISO 9001 certified. ©2004, 2005 Corning Cable Systems. All rights reserved. Published in the USA.
LAN-611-EN / July 2005 / pdf

CORNING
Discovering Beyond Imagination

LANscape® PRETIUM
THE PREMIER SOLUTION